广东风华高新科技股份有限公司
GUANGDONG FENGHUA ADVANCED TECHNOLOGY HOLDING CO., LTD.

承　认　书

APPROVAL　SHEET

客　户：

CUSTOMER：

品　名：

PARTNAME：　铝电解电容器(E-CAP)

系　列：

SERIES：　CD296(LT)系列

规　格：

SPECIFICATION：　见尺寸表

版本号：

VERSION：　QWH-17.001

日　期：

DATE:　2017.11.21

制　造 MANUFACTURE		客　户 CUSTOMER	
拟　制 FORMULATE	批 准 APPROVAL	检 验 CHECK	批 准 APPROVAL

修改记录 REVISION RECORD			
VER 版本	MINUTE OF CHANGES 更改目录	CHECKER 检查人	RELEASE DATE 发行日期

序号 No	目　　录 INDEX	页 page
1	概述 SCOPE	4
2	订货方式 HOW TO ORDER	4
3	主要特性表 MAIN SPECIFICATIONS	5
4	产品结构 PRODUCT STRUCTURE	6
5	纹波电流频率因子 RIPPLE CURRENT FREQUENCY COEFFICIENT	8
6	尺寸表、允许纹波电流 DIMENSIONS AND RIPPLE CURRENT	9
7	包装 PACKING	10
8	贮存方法 STORAGE METHODS	11
9	其他说明 OTHERS	12

1. 概述 SCOPE

1.1 概述 SCOPE

本承认书规定了铝电解电容器的技术规范。

This specification contains descriptions of the quality of aluminum electrolytic capacitors.

1.2 参考标准 APPLICABLE SPECIFICATION

本承认书参考 JISC-5141 和 JISC-5102 制定。

This specification is made based on the Japanese Industrial Standard JISC-5141 Characteristics and JIS C-5102.

1.3 工作温度范围 OPERATING TEMPERATURE RANGE

工作温度范围是电容器在施加额定工作电压条件下，可以长期可靠工作的环境温度范围。

Operating temperature range is the range of ambient temperature at which the capacitor can be operated continuously at rated voltage.

2. 订货方式 HOW TO ORDER

2.1 订货方式 HOW TO ORDER

8 | 2 2 1 | M C | M | 2 2 2 5 | L T | N | 0 | 1 1 | 0

①

代码 Code	产品类别 Type
8	成品 Product
1	素子 Element
2	裸品 Semifinished Product

②

代码 Code	标称容量 Nominal Capacitance
R22	0.22uF
1R0	1uF
2R2	2.2uF
220	22uF
221	220uF
222	2200uF
223	22000uF

③

代码 Code	电压 Voltage
LB	10
LC	16
LD	25
LE	35
LF	50
LG	63
LJ	71
LH	80
MA	100
MB	160
MC	200
MD	250
MF	350
VA	400
VB	450
VC	500
VD	525

④

代码 Code	误差 Tolerance
J	±5%
K	±10%
V	$\pm^{20}_{10}$%
M	±20%
Q	$\pm^{30}_{10}$%
T	$\pm^{50}_{10}$%
A	特殊

⑤

代码 Code	尺寸 Dimensions ΦDxL(mm)
2225	Φ22x25
A050	Φ35x50
A100	Φ35x100
F080	Φ42x80
B080	Φ50x80

⑥

代码 Code	型号 Series
LT	CD296

⑦

代码 Code	商标 Trademark
N	LH.NOVA

⑧

代码 Code	胶管颜色 Sleeve Color
0	黑色 Black
1	深蓝色 Deep-blue
4	紫色 Purple
5	墨绿色 Black-green
7	棕色 Brown
9	绿色 Green

⑨

代码 Code	内码 Intermal Code
11	105℃普通品 105℃ regular
1E	105℃普通品 PET 胶管 105℃ regular & PET Sleeve

⑩

代码 Code	产品脚型 Lead Forming Type
0	散装品 Bulk

2.2 标记 MARKING

2.2.1 在电容器体上应注明如下内容 The following items shall be marked indelibly on the surface of capacitor:

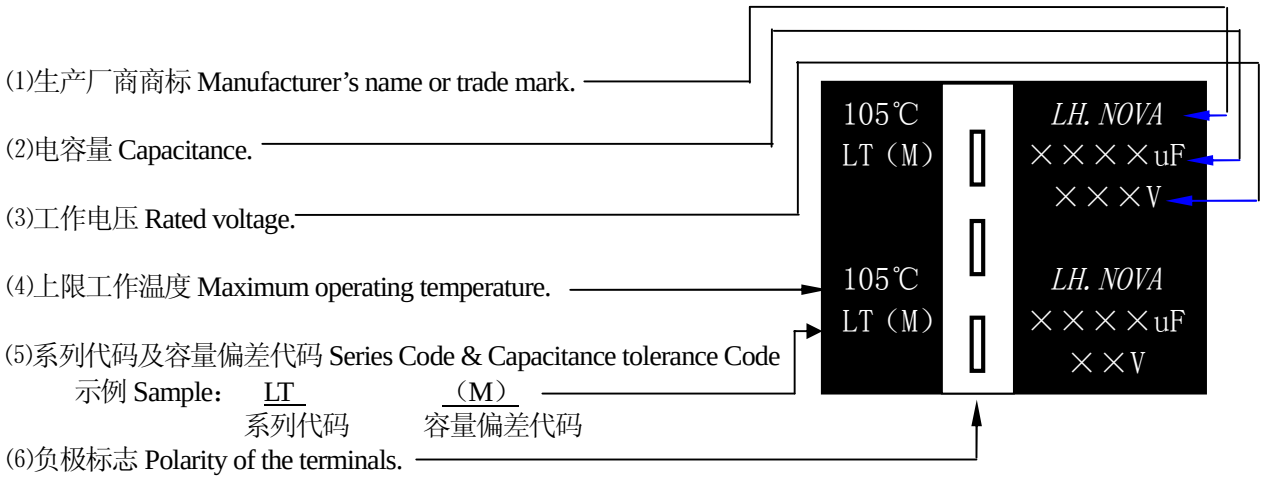

2.2.2 标记颜色 Marking color

套管颜色 Sleeve color：黑色 Black.

标记颜色 Marking color：白色 White.

2.2.3 盖板产品绝缘垫片热印 LOT No.标记：

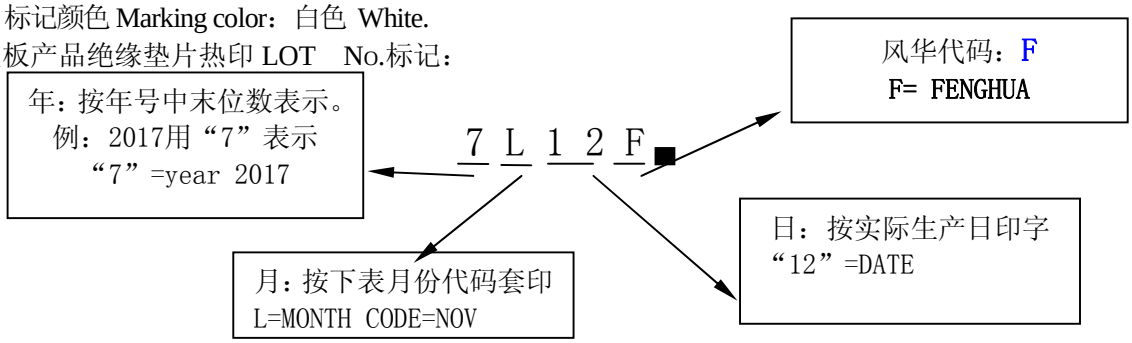

CODE		Month code											
year	code	JAN	FEB	MAR	APR	MAY	JUN	JLY	AUG	SEP	OCT	NOV	DEC
2014	4	A	B	C	D	E	F	G	H	J	K	L	M
2015	5	A	B	C	D	E	F	G	H	J	K	L	M
2016	6	A	B	C	D	E	F	G	H	J	K	L	M
2017	7	A	B	C	D	E	F	G	H	J	K	L	M

3. 主要特性表 MAIN SPECIFICATIONS

项目 Item	主要特性 Performance Characteristics	
额定工作电压范围 Rated Voltage Range	10~100V.DC	160~450V.DC
使用温度范围 Operating Temperature Range	-40℃~+105℃	-25℃~+105℃
标称静电容量范围 Nominal Capacitance Range	470~100000μF	47~2200μF
静电容量允许偏差 Capacitance Tolerance	±20%（M，+20℃，120Hz）	
漏电流 Leakage Current (20℃)	额定工作电压(V) Rated working voltage: 10~450 漏电流 Leakage current: 5分钟后 I≤3 $\sqrt{CV}$ (μA) After 5 min. I≤3 $\sqrt{CV}$ (μA) C：标称静电容量（μF）Nominal Capacitance in μF V：额定工作电压（V）Rated working voltage in V	

损耗角正切 DF
Dissipation Factor

额定工作电压(V) Rated working voltage	10	16	25	35	50	63	80	100	160~250	350~450
DF(MAX) (20℃,120Hz)	0.55	0.50	0.45	0.40	0.35	0.30	0.25	0.20	0.15	0.15

浪涌电压
Surge Voltage

额定工作电压(V) Rated working voltage	10	16	25	35	50	63	80	100	160	200	250	350	400	450
浪涌电压(V) Surge voltage	13	20	32	44	63	79	100	125	200	250	300	400	450	500

温度特性
Temperature Stability

额定工作电压(V) Rated working voltage		10~100	160~250	350~450
阻抗比(120Hz) Impedance Ratio	z-25℃/z+20℃	3	3	8
	z-40℃/z+20℃	12	----------	

高温负荷特性
Load life

在+105℃ 环境中施加额定工作电压和最大允许纹波电流 2000 小时后,电容器的性能符合下面要求:

After application of rated working voltage with max permissible ripple current specified at +105℃ for 2000 hours, capacitors meet the characteristics requirements measured at +20℃ listed at below:

1、电容量变化率:±20%初始测量值以内
Capacitance change : ±20% initial measured value

2、漏电流: ≤初始规定值
Leakage current:≤initial specified value

3、损耗角正切值≤200%倍初始规定值
Dissipation factor: ≤200% initial specified value

高温贮存特性
Shelf life

在+105℃环境无负荷放置 500 小时后, 电容器的性能符合下面要求

After leaving capacitors under no load at +105℃for 500 hours, capacitors meet the characteristics listed as below:

1、电容量变化率:±25%初始测量值以内
Capacitance change : ±25% initial measured value

2、漏电流: ≤200%初始规定值
Leakage current:≤200% initial specified value

3、损耗角正切值≤200%倍初始规定值
Dissipation factor: ≤200% initial specified value

4. 产品结构 PRODUCT STRUCTURE (mm)

4.1 外形尺寸 SHAPE AND DIMENSIONS

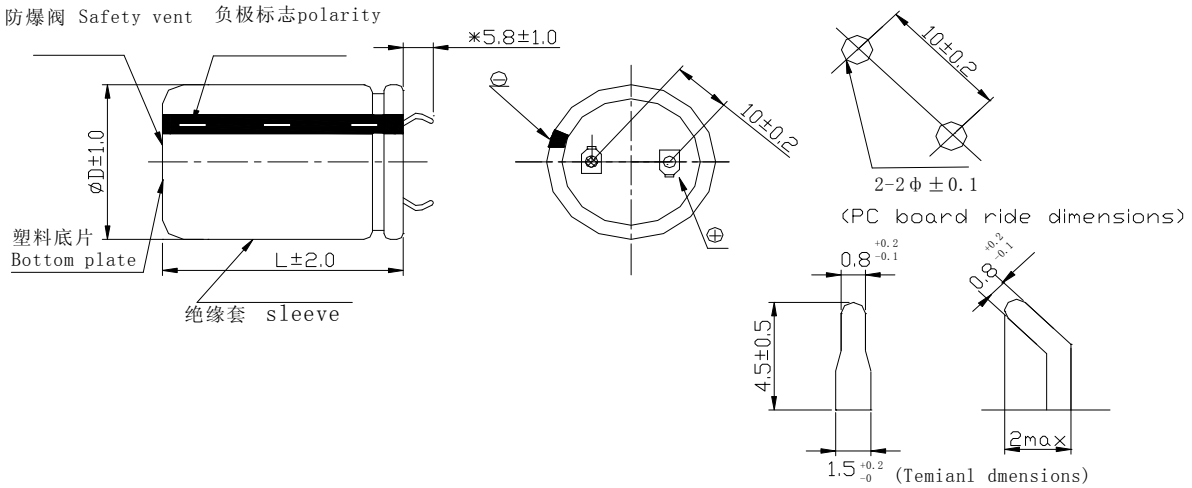

4．2 内部构造图及构成材料 INTERNAL CONSTRUCTION AND COMPONENTS

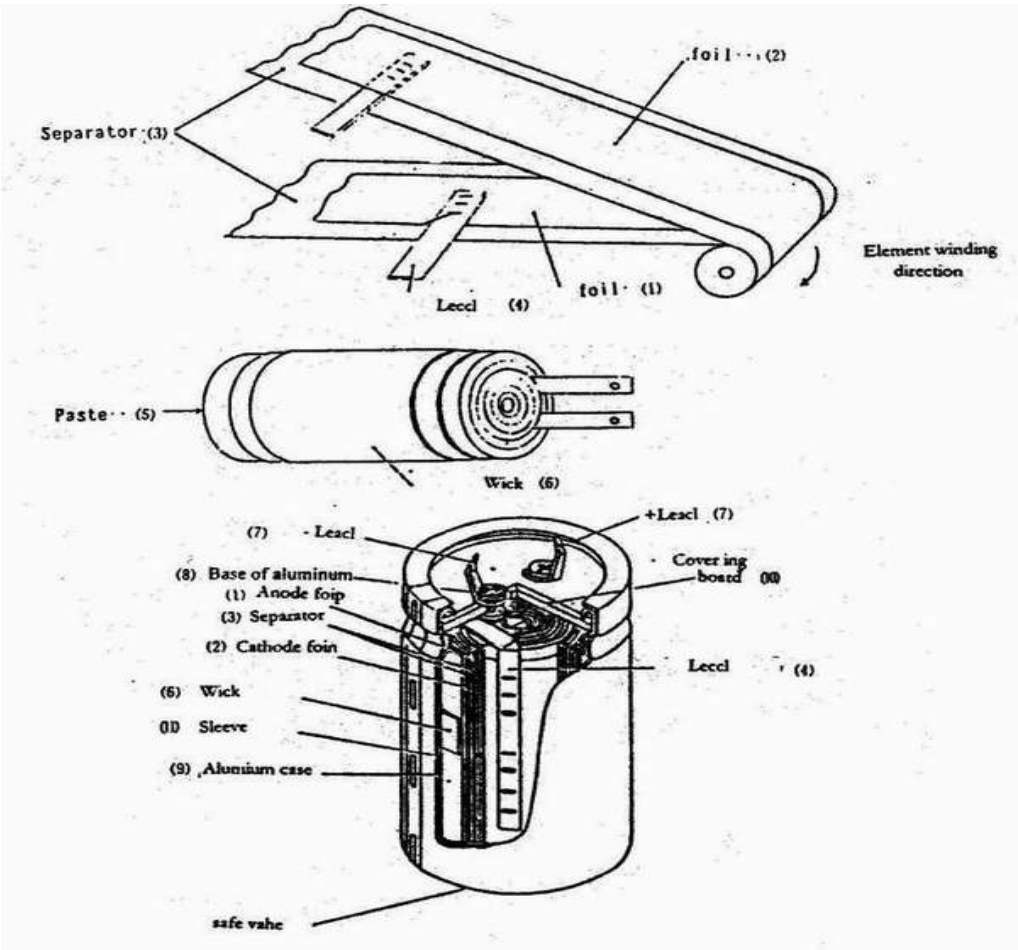

原料 MATERIALS

序号 NO.	项目 ITEM	原料 MATERIALS
1	正极箔 Anode foil	高纯铝箔(纯度:99.97%),厚度:70μm~104μm High-purity Aluminum foil(purity:99. 97%),thickness:70μm~104μm
2	负极箔 Cathode foil	高纯铝箔(纯度:99.92%),厚度:20μm~50μm High-purity Aluminum foil(purity:99. 92%),thickness:20μm~50μm
3	电解纸 Separator	160V~450V: 纸，厚度: 60μm~100μm 160V~450V: Craft paper,thickness: 60μm~100μm
4	引出条 Aluminum lead	纯度:99.92% Purity:99. 92%
5	电解液 Paste	乙二醇、羧酸酯、添加剂 Etylen glycol and carboxylate with anti-solvent additive
6	芯子 Wick	铝箔，电解纸，引出条 Aluminum foil，Craft paper，Aluminum lead
7	引出线 Lead wire	镀锡铁线 Tinned Fe wire
8	铝墩 Base of Aluminum	纯度:99.92% Purity:99. 92%
9	铝壳 Aluminum case	(纯度:99.2%,直径 8 毫米及其以上配有防爆阀) (Purity:99. 2%, for φ8 and up built-in safety vent)
10	封口板 Covering board	酚醛树脂板 Resin board of hydroxybenzene and aldehyde
11	套管 Sleeve	套管，厚度: 90μm~130μm thickness: 90μm~130μm

5. 纹波电流频率因子 RIPPLE CURRENT FREQUENCY COEFFICIENT

Freq(Hz) / WV(V)	50	60	120	1K	10K≤
10~100	0.88	0.90	1.00	1.10	1.15
160~250	0.80	0.80	1.00	1.14	1.18
350~450	0.78	0.80	1.00	1.10	1.15

6. 尺寸表、允许纹波电流 DIMENSIONS AND RIPPLE CURRENT （LT）

WV/V	10(LB)		16(LC)		25(LD)		35(LE)		50(LF)		63(LG)		80(LH)		100(MA)	
Cap/μF	(1)	(2)	(1)	(2)	(1)	(2)	(1)	(2)	(1)	(2)	(1)	(2)	(1)	(2)	(1)	(2)
470(471)															22×25	0.95
560(561)															22×30	1.00
680(681)															22×30 25×25	1.09
820(821)															25×30	1.20
1000(102)											22×25	1.10	22×25	1.19	25×30	1.47
1200(122)											22×30	1.20	25×25	1.30	22×40	1.50
1500(152)											22×30 25×25	1.38	22×30 25×25	1.59	22×45 25×40	1.89
1800(182)											25×30	1.50	25×30	1.80	25×45	2.10
2200(222)									22×30 25×25	1.46	22×35 25×30	1.66	22×40 25×35	2.01	25×50 30×40	2.48
2700(272)									22×30 22×35	1.40 1.50	25×35	1.80	25×40	2.20	30×45	2.70
3300(332)							22×25	1.54	22×35 25×30	1.72	25×35 30×30	2.15	25×45 30×35	2.50	30×50 35×45	3.25
3900(392)							22×30	1.60	25×30	1.80	30×35	2.40	30×40	2.80	35×50	3.50
4700(472)							22×35 25×25	1.87	25×35 30×30	2.25	25×50 30×40	2.77	30×45 35×35	3.30	30×60 35×50	3.80
5600(562)							25×30	2.00	30×35	2.50	30×45	3.10	35×40	3.60	35×60	4.10
6800(682)			22×25	1.66	22×35 25×25	1.88	22×40 25×35	2.28	25×45 30×35	2.91	30×50 35×40	3.61	30×50 35×45	3.90		
8200(822)			25×25	1.80	25×40	2.00	25×40	2.40	30×45	3.10	35×50	3.80	35×50	4.10		
10000(103)	22×25	1.65	22×30 25×30	2.07	25×35 30×30	2.38	25×45 30×35	2.78	30×50 35×40	3.57	30×60 35×50	4.69	35×60	4.30		
12000(123)	22×30	1.80	25×35	2.20	25×40	2.50	30×40	3.00	35×50	4.10						
15000(153)	22×35 25×30	2.01	25×35 30×30	2.54	25×45 30×35	3.00	30×45 35×35	3.70	35×50	4.76						
18000(183)	25×35	2.20	30×35	2.81	30×40	3.40	35×40	4.00								
22000(223)	25×35 30×30	2.59	25×45 30×35	3.31	30×40 35×35	3.92	30×50 35×45	4.90								
27000(273)	30×35	2.80	30×40	3.60	35×45	4.10	35×50	5.10								
33000(333)	25×45 30×35	3.43	30×45 35×40	4.33	30×60 35×50	5.13	35×60	6.30								
39000(393)	30×40	3.80	35×45	4.50	35×50	5.20										
47000(473)	30×45 35×40	4.20	30×50 35×45	5.49	35×60	6.65										
56000(563)	35×45	4.50	35×50	5.60												
68000(683)	30×60 35×50	5.50	35×60	7.00												
82000(823)	35×60	5.80														
100000(104)	35×60	7.10														

WV/V Cap/μF	160(MB)		200(MC)		250(MD)		350(MF)		400(VA)		450(VB)	
	(1)	(2)	(1)	(2)	(1)	(2)	(1)	(2)	(1)	(2)	(1)	(2)
47(470)									22×25	0.37	22×25	0.40
56(560)									22×30	0.42	22×30	0.46
68(680)							22×30	0.47	25×25	0.56	22×30 25×25	0.53
82(820)							22×35	0.50	22×30	0.60	22×30	0.60
100(101)							22×35 25×25	0.70	22×35 25×30	0.69	22×40 25×30	0.64
120(121)							25×30	0.80	25×35	0.75	25×35	0.70
150(151)					22×25	0.70	25×30	0.82	22×40 25×35	0.82	25×40 30×30	0.79
180(181)					22×25 22×30	0.75 0.80	25×35	1.00	22×45	0.90	30×35	0.85
220(221)	22×25	0.75	22×25	1.00	22×35 25×25 25×30	1.00 0.80 1.00	25×35 30×30	1.03	22×35 25×40 30×35	0.90 1.00 1.00	25×35 25×50 30×40	0.9 1.00 1.00
270(271)	22×25	0.80	22×30	1.10	25×35	1.20	30×35	1.10	30×40	1.10	30×45	1.10
330(331)	25×25	1.00	22×35 25×30	1.20	25×35 30×30	1.20	25×45 30×35	1.30	30×30 30×45 35×35	1.10 1.20 1.20	30×50 30×50 35×40 30×35	1.38 1.38 1.38 1.30
390(391)	22×30	1.10	25×35	1.30	30×35	1.30	30×40	1.40	35×40	1.30	35×45	1.40
470(471)	22×35 25×30	1.30	22×40 25×35	1.40	25×50 30×40	1.40	30×45 35×35	1.65	30×45 30×50 35×40 35×45	1.40	35×50	1.50
560(561)	30×30	1.50	30×35	1.50	30×45	1.50	35×45	1.80	35×50	1.50		
680(681)	25×40 30×30	1.60	30×40 35×35	1.70	30×45 35×40	1.70	35×50	2.00	30×45 35×60	1.40 1.80	35×60	1.60
820(821)	30×35	1.80	35×40	1.80	35×45	1.80			35×45 35×60	1.65 1.80	35×60 35×70	2.20
1000(102)	30×40 35×35	2.20	30×45 35×40	2.20	35×50	2.20			35×50 35×70	2.10 2.40	35×70	2.50
1200(122)	35×40	2.30	35×40 35×45	2.20 2.30	35×60	2.40					35×80	2.50
1500(152)	30×50 35×40	2.50	30×60 35×50	2.70								
1800(182)	35×50	2.80	35×60	2.80								
2200(222)	35×60	3.30										

(1)外形尺寸　Case Size D×L(mm)
(2)最大允许纹波电流 Max allowable ripple current　(A rms +105℃,120Hz)

6.1 客户料号与风华物料对照表 Customer P/N and Fenghua P/N collate list

客户 P / N	风华 P / N
--	8471VAMA040LTN0110

7. 包装 PACKING

7.1 盖板产品包装标准：

产品尺寸	纸盒	隔卡	数量/盒（只）	外箱	盒/箱	数量/箱（只）	备注
φ22X25～30	D35-43	F-224	135	B-4	7	945	1、首先在纸盒内垫一张 380*235mm 的电解纸； 2、包装时将电容焊针朝上； 3、包装后需在电容面放一张 380*235mm 的负箔,作放电用。
φ22X35～40	D35-53	F-225			6	810	
φ22X45～50	D35-63	F-226			5	675	
φ25X25～30	D35-43	F-254	105		7	735	
φ25X35～40	D35-53	F-255			6	630	
φ25X45～50	D35-63	F-256			5	525	
φ25X60	D35-76	F-257			4	420	
φ30X25～30	D35-43	F-304	75		7	525	
φ30X35～40	D35-53	F-305			6	450	
φ30X45～50	D35-63	F-306			5	375	
φ30X60	D35-76	F-307			4	300	
φ35X25～30	D35-43	F-354	60		7	420	
φ35X35～40	D35-53	F-355			6	360	
φ35X45～50	D35-63	F-356			5	300	
φ35X60	D35-76	F-357			4	240	
φ35X70～80	D35-80	F-358			3	180	

7.2 内包装标签 PACKING LABEL

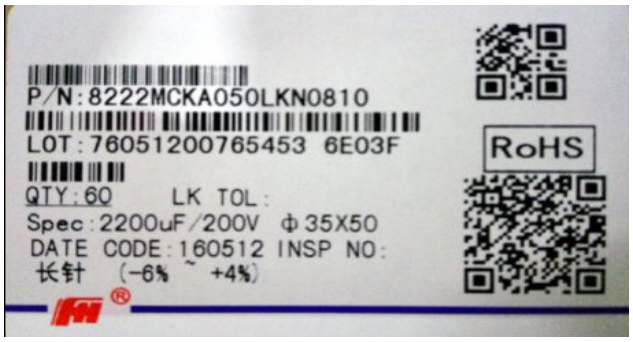

规格、尺寸 Specification and dimensions

批号的填写 LOT：

1	2	3	4	5	6	7	8	9	10	11	12	13	14
类别 Sort	年份 Year	月份 Month		日期 Date		区别号 Discriminate mark	流传单号码 Sequence number						

7.3 装箱标签粘贴标准：

7.4 外箱打包标准：

7.6 外包装箱不干胶标签，实用尺寸为 167.5mmX97.5mm。
The dimension of the label on the carton is 167.5mmX97.5mm

广东风华高新科技股份有限公司
FENGHUA ADVANCED TECHNOLOGY HOLDING CO., LTD
装箱清单号:LH201605070016 箱号：109/130

客户名称		业务员	
订单号：SA20160406407D 业务部：进出口公司		净重Kg:14.6	毛重Kg: 18.6

序号	型号规格	客户料号	客户PO	数量 千只	备注
1	8151VAM2240LKN0810 150uF/400V ϕ22X40	BG-157401-MVC		0.81	
合计				0.81	

QA 2016-05-07 PASS

日期：16/05/07

8. 贮存方法 STORAGE METHODS

保存期限：1 年，超一年后，需对产品重新加工作电压老练后才使用。
如果没有其他规定，标准的测试、检验环境条件如下所示：
环境温度：5 至 35℃；相对湿度：45 至 85%；大气压力：86kpa 至 106kpa。
如果对测试结果有异议，可以在以下条件测试：
环境温度：20±2℃；相对湿度：60 至 70%；大气压力：86kpa 至 106kpa。
Storage life： 1 year，after a year, the product need to be recharged before use.
Unless otherwise specified, the standard range of atmospheric conditions for making measurements and tests are as follows.
Ambient temperature: 5 to 35℃ Relative humidity: 45 to 85% Air pressure: 86kpa to 106kpa.
If there may be doubt on the results, measurements shall be made within the following limits.
Ambient temperature: 20±2℃ Relative humidity: 60 to 70% Air pressure: 86kpa to 106kpa.

9. 其它说明 OTHERS

9.1 铝电解电容器使用注意事项 Important information on the application of aluminium electrolytic capacitors

(1).直流铝电解电容器应按正确的极性使用 DC electrolytic capacitors are polarized

当直流铝电解电容器被反极性接入电路时，电容器会导致电子线路短路，由此产生的电流会引致电容器损坏。若电路中有可能在负引线施加正极电压，请选用无极性产品。

When reverse voltage is applied on DC electrolytic capacitor, the capacitor will become short-circuited please use non-polarized capacitors in the circuit or the capacitor will be damage due to abnormal current flows through the capacitors since the circuit where the positive voltage may be applied to the cathode terminal.

(2).在额定工作电压以下作用 Use capacitor within rated voltage

当电容器上所施加电压高于额定工作电压时，电容器的漏电流将上升，其电气特性将在短时内劣化直至损坏。请注意电压峰值勿超出额定工作电压。

When capacitor is used at higher voltage than the rated voltage, leakage current increases, characteristics drastically deteriorate and damage in a short period may occur as a result. Please take extra caution that the peak voltage should not exceed the rated voltage.

(3).作快速充放电使用 Charge and discharge application.

当常规电容器被用作快速充电用途。其使用寿命可能会因为容量下降，温度急剧上升等而缩减

When aluminum electrolytic capacitors for general purpose are employed in rapid charge and discharge application, its life may be shorted by capacitance decreasing, heat rising, etc.

(4).电容器贮存 Store the capacitor.

当铝电解电容器作了长期贮存后，其漏电流通常升高，贮存温度愈高，漏电流上升愈快。因此应注意贮存环境的选择，在电容器上施加电压后，漏电流值将不断下降，在铝电解电容器的漏电流值上升对电路有不良影响的，请在使用前充电处理。

I creased leakage current is common in aluminum capacitors which have been stored for long period of time. The Higher the storage temperature, the higher the leakage current increase, therefore please take precautions concerning the storage location. The leakage current decreases gradually as voltage is applied to the capacitor. In cases where increased leakage current causes problems in the circuit, apply voltage (aging) before using.

(5).施加纹波电流应小于额定值 Ripple current applied to capacitor should not exceed the rated value.

施加纹波电流超过额定值后，会导致电容器体过热，容量下降，寿命缩短。所施加纹波电压的峰值应小于额定工作电压。

Excessive heat will reduce capacitance and result in shortened life of capacitor if ripple currents exceeding the specified rated value are applied. The peak value of the ripple voltage should be less than the rated voltage.

(6).使用环境温度 Ambient temperature.

铝电解电容器的使用寿命会受到环境温度的影响。据科学统计，使用环境温度下降 10℃其使用寿命增加 1 倍。

Its ambient temperature closely affects the life of an aluminum electrolytic capacitor. It is generally stated, that life doubles for each 10℃ decrease in temperature.

(7).引出线强度 Lead stress

当拉力施加到电容器引出线，该拉力将作用于电容器内部，这将导致电容器内部短路，开路或漏电流上升。在电容器焊装到电路板，请勿强烈摇动电容器。

When a strong force is applied to the lead wires or terminals, stress is put on the internal connections. This may result in short circuit, open circuit or increased leakage current. It is not advisable to bend or handle a capacitor after it has been soldered to the PCB board.

(8).焊接过程耐热性 Heat resistance at the soldering process

铝电解电容器装至电路板进行浸焊或波峰焊时，其塑料套管可能因焊接时间过长、温度过高而发生破裂或二次收缩。

In the dip soldering process of PCB board with aluminum electrolytic capacitors mounted, secondary shrinkage or crack of PVC sleeve may be observed when solder temperature is too high or dipping time is too long.

(9).电路板的安装孔距及安装位置 Hole pitch and position of PCB board.

电路板安装孔的设计应与产品说明书的引线脚距相一致，如果将电容器强行插入孔距不配套的电路板，那么会有应力作用于引出线，这将导致短路或漏电流上升。

PCB board must be designed so its hole coincides with the lead pitch (lead spacing) of the capacitor specified by the catalog or specifications. When a capacitor is forcibly inserted into an unmatched hole, a stress is put on the leads. This could result in a short circuit or increased leakage current.

9.2 本产品不含铅、镉等元素 This product does not include Plumbum or Cadmium.